Hyundai Kona: Dual Clutch Transmission Control System / DCT Control Module (TCM) Schematic diagrams

1. TCM connetor

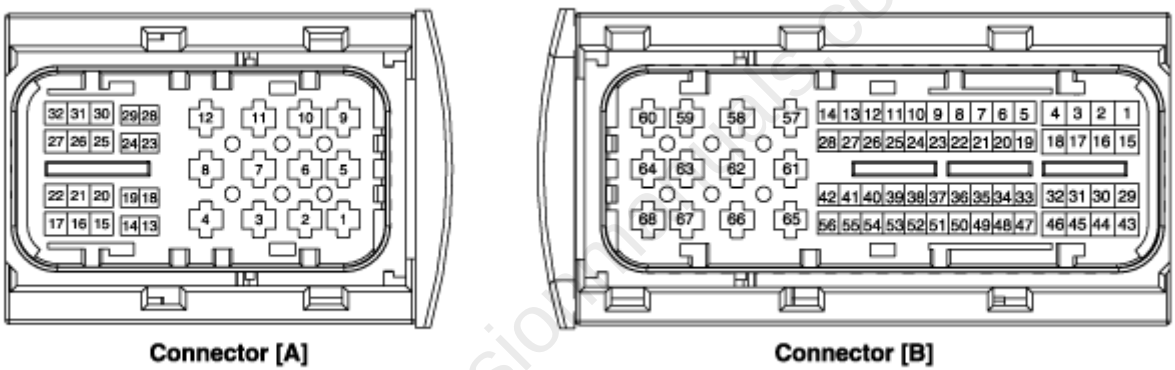

2. TCM Terminal Function

Connector [A]

Pin	Discription	Pin	Discription
1	Clutch Actuator (Clutch motor 1 (ODD)_Phase V)	17	-
2	Clutch Actuator (Clutch motor 2 (EVEN)_Phase V)	18	Clutch Actuator (Clutch motor 1 (ODD)_Hall 1)
3	Select Actuator (Select Solenoid 2 (EVEN)_Ground)	19	Clutch Actuator (Clutch 1(ODD)_Sensor Supply)

4	Select Actuator (Select Solenoid 1(ODD)_Push)	20	Select Actuator (Select Solenoid 1 (ODD)_Sensor Supply)
5	Clutch Actuator (Clutch motor 1 (ODD)_Phase U)	21	Select Actuator (Selcet Solenoid 2 (EVEN)_Sensor Supply)
6	Clutch Actuator (Clutch motor 2 (EVEN)_Phase U)	22	Selcet Actuator (Select Solenoid 2 (EVEN)_Sensor Output)
7	Select Actuator (Selec Solenoid 1 (ODD)_Ground)	23	Clutch Actuator (Clutch motor 2 (EVEN)_Hall 2)
8	Select Actuator (Select Solenoid 2(EVEN)_Pull)	24	Clutch Actuator (Clutch motor 2 (EVEN)_Hall 3)
9	Clutch Actuator (Clutch motor 1 (ODD)_Phase W)	25	Clutch Actuator (Clutch motro2 (EVEN)_Ground)
10	Clutch Actuator (Clutch motor 2 (EVEN)_Phase W)	26	Select Actuator (Select Solenoid 1 (ODD)_Sensor Output)
11	Select Actuator (Selec Solenoid 1 (ODD)_Pull)	27	-
12	Select Actuator (Select Solenoid 2 (EVEN)_Push)	28	Clutch Actuator (Clutch motor 2 (EVEN)_Hall 1)
13	Clutch Actuator (Clutch motor 1(ODD)_Hall 2)	29	Clutch Actuator (Clutch motor 2 (EVEN)_Sensor Supply)
14	Clutch Actuator (Clutch motor 1(ODD)_Hall 3)	30	Select Actuator (Select Solenoid 1 (ODD)_Sensor Ground)
15	Clutch Actuator (Clutch motor 1 (ODD)_Sensor Ground)	31	Select Actuator (Select Solenoid 2 (EVEN)_Sensor Ground)
16	-	32	-

Connector [B]

Pin	Discription	Pin	Discription
1	-	35	-
2	-	36	-
3	ON / START Input	37	-
4	Paddle Shift (Up) Switch Input Signal	38	-
5	Inhibitor Switch "P" Input Signal	39	-
6	Inhibitor Switch "R" Input Sigal	40	-
7	Inhibitor Switch "D" Input Signal	41	Shift Actuator (Shift Motor 2 (EVEN) _HALL 2)
8	Sports mode "Down" Shift	42	Shift Actuator (Shift Motor 2 (EVEN) _HALL 3)
9	Input Speed Sensor Signal 2 (EVEN)	43	Inhibitor Switch "M" Input Signal
10	-	44	CAN 1 Communication Port 1 High
11	-	45	CAN 1 Communication Port 1 Low

transmissionmanuals.com

12	-	46	-
13	Shift Actuator (Shift motor 1 (ODD)_Hall 2)	47	-
14	Shift Actuator (Shift motor 1 (ODD)_Hall 3)	48	Flex ray High (BP)
15	-	49	Input Speed Supply 1 (ODD)
16	-	50	Input Speed Signal 1 (ODD)
17	Battery Power (Low)	51	-
18	Paddle Shift (Down) Input Signal	52	-
19	Shift Lever Select Switch	53	-
20	Inhibitor Switch "N" input Signal	54	Shift Actuator (Shift Motor 2 (EVEN) _Sensor Supply)
21	Sports mode "Up" Shift	55	Shift Actuator (Shift Motor 2 (EVEN) _HALL 1)
22	-	56	Shift Actuator (Shift Motor 2 (EVEN) _Sensor Ground)
23	Input Speed Supply 2 (EVEN)	57	Power Ground 1 for High Current Modules
24	5V spare supply output	58	Power Ground 2 for High Current Modules
25	-	59	Shift Actuator (Shift Motor 2 (EVEN)_Phase W)
26	Shift Actuator (Shift Motor 1 (ODD)_Sensor Supply)	60	Shift Actuator (Shift Motor 1 (ODD)_Phase W)
27	Shift Actuator (Shift Motor 1 (ODD)_HALL 1)	61	Power Ground 3 for High Current Modules
28	Shift Actuator (Shift Motor 1 (ODD)_Sensor Ground)	62	-
29	-	63	Shift Actuator (Shift Motor 2 (EVEN)_Phase V)
30	CAN 2 Communication Port 2 High	64	Shift Actuator (Shift Motor 1 (ODD)_Phase V)
31	CAN 2 Communication Port 2 Low	65	Motor Supply Voltage 1 from Direct Battery
32	-	66	Motor Supply Voltage 2 from Direct Battery
33	-	67	Shift Actuator (Shift Motor 2 (EVEN)_Phase U)
34	Flex ray Low (BM)	68	Shift Actuator (Shift Motor 1 (ODD)_Phase U)

transmissionmanuals.com

3. Terminal input/output signal

Connector [A]

Pin	Discription	Condition	Input / output value	
			Type	Level
1	Clutch Actuator (Clutch Motor 1 (ODD)_Phase V)	Low	Output	0V
		PWM		0V - Battery voltage

2	Clutch Actuator (Clutch Motor 2 (EVEN) Phase V)	Low	Output	0V
		PWM		0V - Battery voltage
3	Select Actuator (Select Solenoid 2 (EVEN)_Ground)	ON	Output	0V
4	Select Actuator (Select Solenoid 1 (ODD) Push)	ON	Output	Battery voltage
		OFF		0V
5	Clutch Actuator (Clutch Motor 1 (ODD)_Phase U)	Low	Output	0V
		PWM		0V - Battery voltage
6	Clutch Actuator (Clutch Motor 2 (EVEN)_Phase U)	Low	Output	0V
		PWM		0V - Battery voltage
7	Select Actuator (Select Solenoid 1 (ODD) Ground)	ON	Output	0V
8	Select Actuator (Select Solenoid 2 (EVEN)_ Pull)	ON	Output	Battery voltage
		OFF		0V
9	Clutch Actuator (Clutch Motor1 (ODD)_Phase W)	Low	Output	0V
		PWM		0V - Battery voltage
10	Clutch Actuator (Clutch Motor 2 (EVEN)_Phase W)	Low	Output	0V
		PWM		0V - Battery voltage
11	Select Actuator (Select Solenoid 1 (ODD) Pull)	ON	Output	Battery voltage
		OFF		0V
12	Select Actuator (Select Solenoid 2 (EVEN) Push)	ON	Output	Battery voltage
		OFF		0V
13	Clutch Actuator (Clutch Motor 1 (ODD)_HALL 2)	High	Input	4.5V
		Low		0V
14	Clutch Actuator (Clutch Motor 1 (ODD)_HALL 3)	High	Input	4.5V
		Low		0V
15	Clutch Actuator (Clutch Motor 1 (ODD)_Ground)	Ground	Ground	0V
16	-			
17	-			
18	Clutch Actuator (Clutch Motor 1 (ODD)_HALL 1)	HIgh	Input	4.5V
		Low		0V
19	Clutch Actuator (Clutch Motor 1 (ODD)_Sensor Supply)	-	Power	8.75V
20	Select Actuator (Select Solenoid 1 (ODD)_Sensor Supply)	-	Power	8.75V
21	Select Actuator (Select Solenoid 2 (EVEN)_Sensor Supply)	-	Power	8.75V

transmissionmanuals.com

22	Select Actuator (Select Solenoid 2 (EVEN)_Sensor Ouput)	High	Input	4V
		Low		1V
23	Clutch Actuator (Clutch Motor 2 (EVEN)_HALL 2)	High	Input	4.5V
		Low		0V
24	Clutch Actuator (Clutch Motor 2 (EVEN)_HALL 3)	High	Input	4.5V
		Low		0V
25	Clutch Actuator (Clutch Motor 2 (EVEN)_Sensor Ground)	Ground	Ground	0V
26	Select Actuator (Select Solenoid 1 (ODD)_Sensor Output)	High	Input	4V
				1V
27	-			
28	Clutch Actuator (Clutch Motor 2 (EVEN)_HALL 1)	High	Input	4.5V
		Low		0V
29	Clutch Actuator (Clutch Motor 2 (EVEN)_Supply)		Power	8.75V
30	Select Actuator (Select Solenoid 1 (ODD)_Sensor Ground)	Ground	Ground	0V
31	Select Actuator (Select Solenoid 2 (EVEN)_Sensor Ground)	Ground	Ground	0V
32	-			

Connector [B]

Pin	Discription	Condition	Input / output value	
			Type	Level
1				
2				
3	ON / START Input	-	Power	9V < Battery voltage < 16V
4	Paddle Shift (Up) Switch Signal	High	Input	9V < Battery voltage < 16V
		Low		0V
5	Inhibitor Switch "P" Input Signal	High	Input	9V < Battery voltage < 16V
		Low		0V
6	Inhibitor Switch "R" Input Signal	High	Input	9V < Battery voltage < 16V
		Low		0V
7	Inhibitor Switch "D" Input Signal	High	Input	9V < Battery voltage < 16V

transmissionmanuals.com

		Low		0V
8	Sports mode "Down" shift	High	Input	9V < Battery voltage < 16V
		Low		0V
9	Input Speed Sensor Signal 2 (EVEN)	High	Input	0.448V
		Low		0.224V
10				
11				
13	Shift Actuator (Shift Motor 1 (ODD) _HALL 2)	High	Input	4.5V
		Low		0V
14	Shift Actuator (Shift Motor 1 (ODD) _HALL 3)	High	Input	4.5V
		Low		0V
15	-			
16	-			
17	Battery Power Low VBD		Power	9V < Battery voltage < 16V
18	Paddle Shift (Down) Signal	High	Input	9V < Battery voltage < 16V
		Low		0V
19	Shift Lever Select Switch	High	Input	9V < Battery voltage < 16V
		Low		0V
20	Inhibitor Switch "N" Input Signal	High	Input	9V < Battery voltage < 16V
		Low		0V
21	Sports mode "Up" shift	High	Input	9V < Battery voltage < 16V
		Low		0V
22	-			
23	Input Speed Supply 2 (EVEN)		Power	8.75V
24	5V spare supply output		Power	5V
25	-			
26	Shift Actuator (Shift Motor 1 (ODD)_Sensor Supply)		Power	8.75V
27	Shift Actuator (Shift Motor 1 (ODD)_HALL 1)	High	Input	4.5V
		Low		0V
28	Shift Actuator (Shift Motor 1 (ODD)_Sensor Ground)	Ground	Ground	0V
29	-			

transmissionmanuals.com

30	CAN2 Communication Port2 High	Rec./Dom	CAN Line	Recessive : 2.5V
				Dominant : 3.5V
31	CAN2 Communication Port2 Low	Rec./Dom	CAN Line	Recessive : 2.5V
				Dominant : 1.5V
32	-			
33	-			
34	Flex ray Low (BM)	Idle	CAN Line	Idle : 2.5V
		Differential		Differential : 2.0 V / 3.0 V
35	-			
36	-			
37	-			
38	-			
39	-			
40	-			
41	Shift Actuator (Shift Motor 2 (EVEN) _HALL 2)	High	Input	4.5V
		Low		0V
42	Shift Actuator (Shift Motor 2 (EVEN) _HALL 3)	High	Input	4.5V
		Low		0
43	Inhibitor Switch "M" Input Signal	High	Input	9V < Battery voltage < 16V
		Low		0V
44	CAN1 Communication Port1 High	Idle	CAN Line	
		Differential		
45	CAN1 Communication Port1 Low	Rec./Dom	Rec./Dom	Recessive : 2.5V
				Dominant : 3.5V
46	-			
47	-			
48	Flex ray High (BP)	Rec./Dom	CAN Line	Idle : 2.5V
				Differential : 2.0 V / 3.0 V
49	Input Speed Supply 1 (ODD)	-	Power	8.75V
50	Input Speed Signal 1 (ODD)	High	Input	0.448V
		Low		0.224V
51	-			
52	-			

transmissionmanuals.com

53	-			
54	Shift Actuator (Shift Motor 2 (EVEN) _Sensor Supply)	-	Power	8.75V
55	Shift Actuator (Shift Motor 2 (EVEN) _HALL 1)	High	Input	4.5V
		Low		0.8V
56	Shift Actuator (Shift Motor 2 (EVEN) _Sensor Ground)	Ground	Ground	0V
57	Power Ground 1 for High Current Modules	Ground	Ground	Ground
58	Power Ground 2 for High Current Modules	Ground	Ground	Ground
59	Shift Actuator (Shift Motor 2 (EVEN)_Phase W)	Low	Out put	
		PWM		
60	Shift Actuator (Shift Motor 1 (ODD)_Phase W)	Low	Out put	0V
		PWM		0V - Battery voltage
61	Power Ground 3 for High Current Modules	Ground	Ground	Ground
62	-			
63	Shift Actuator (Shift Motor 2 (EVEN)_Phase V)	Low	Out put	0V
		PWM		0V - Battery voltage
64	Shift Actuator (Shift Motor 1 (ODD)_Phase V)	Low	Out put	0V
		PWM		0V - Battery voltage
65	Motor Supply Voltage 1 from Direct Battery		Power	9V < Battery voltage < 16V
66	Motor Supply Voltage 2 from Direct Battery		Power	9V < Battery voltage < 16V
67	Shift Actuator (Shift Motor 2 (EVEN)_Phase U)	Low	Out put	0V
		PWM		0V - Battery voltage
68	Shift Actuator (Shift Motor 1 (ODD)_Phase U)	Low	Out put	0V
		PWM		0V - Battery voltage

transmissionmanuals.com

Circuit Diagram

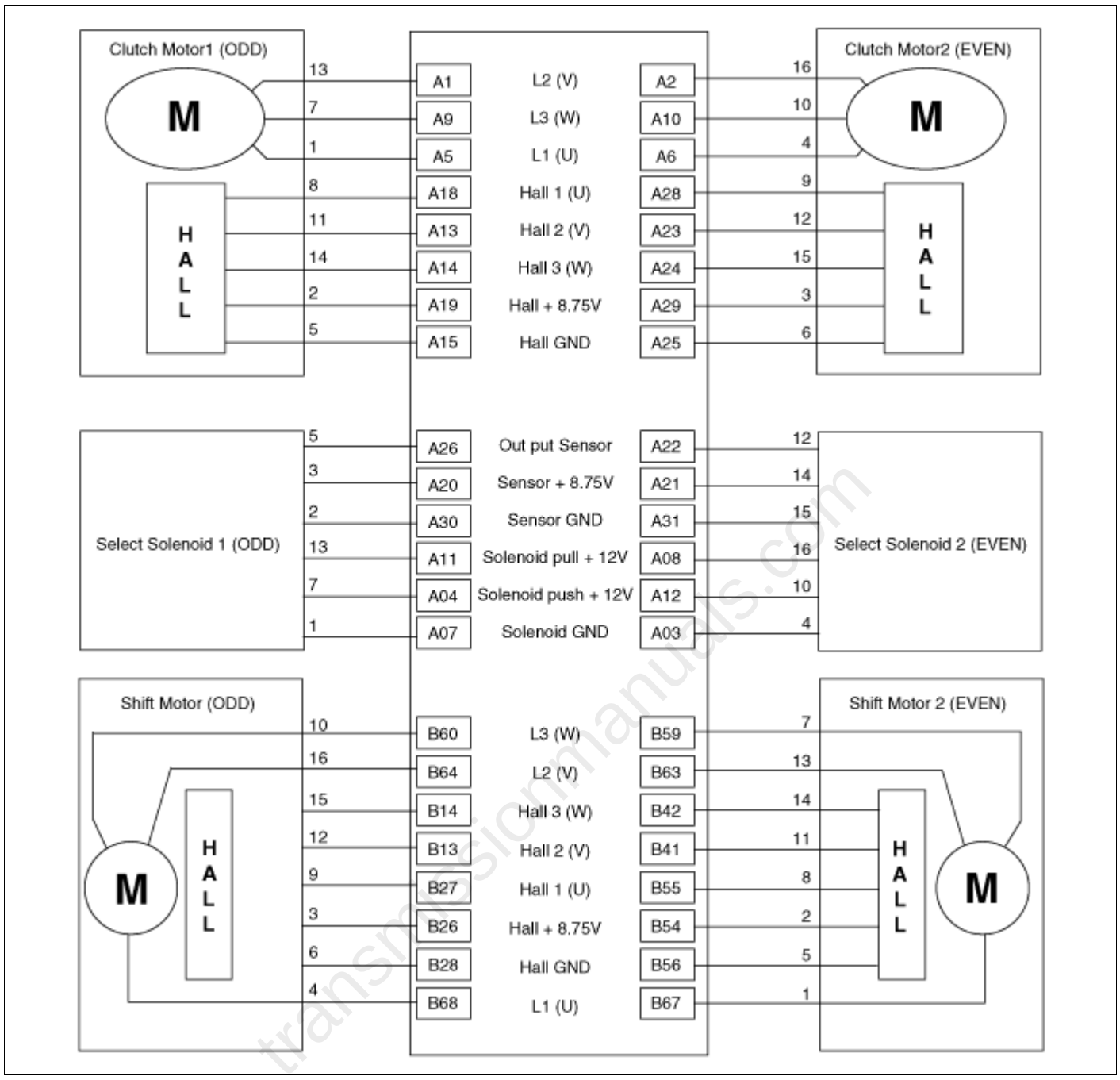

transmissionmanuals.com

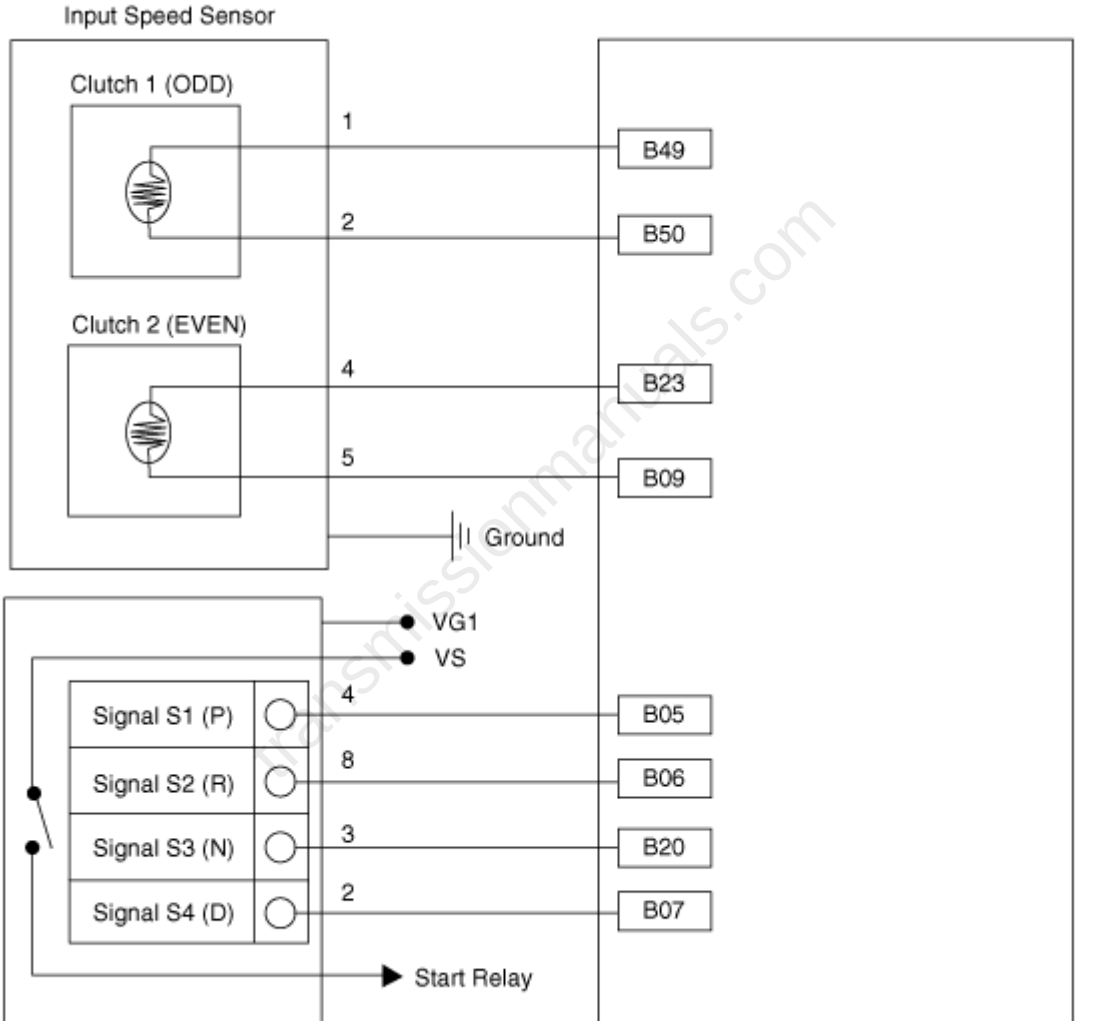

transmissionmanuals.com